SEGA™

SONIC THE HEDGEHOG™

OPERATION MANUAL FOR SONIC THE HEDGEHOG

COIN OPERATED REDEMPTION GAME

COPYRIGHT SEGA ENTERPRISES, INC. (USA) AUGUST 1993

SEGA ENTERPRISES, INC. (USA) 45133 INDUSTRIAL DRIVE FREEMONT, CA 94538 PH: (415) 802 -1750 FAX: (415) 802 - 1754
DEVELOPED FOR SEGA ENTERPRISES, INC. (USA) BY STING, INTERNATIONAL

PART NO. 90-12-108

LEVEL YOUR SONIC GAME PRIOR TO OPERATION!

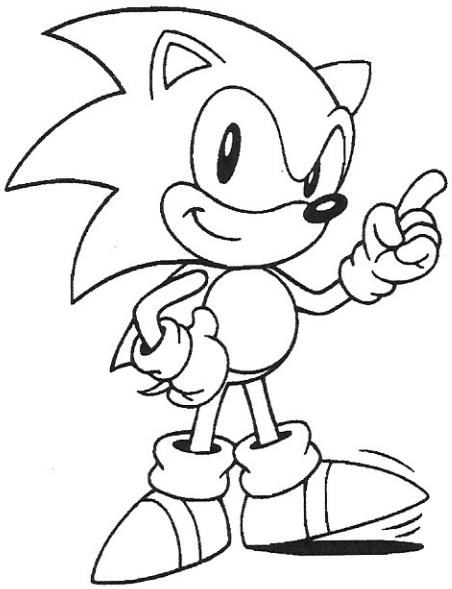

PLEASE TAKE A MOMENT TO REVIEW YOUR "SONIC" MANUAL BEFORE OPERATNG YOUR GAME.

REFER TO THE DIP SWITCH SETTINGS LOCATED WITHIN THIS MANUAL TO ADJUST YOUR "SONIC" TO THE DESIRED PLAY FUNCTIONS THAT BEST SUIT YOUR LOCATION.

CAUTION: FOR PROPER OPERATION THIS GAME MUST OPERATE ON 110 VAC 60 HZ INPUT VOLTAGE.

POWER:	4.00 AMPS	440 WATTS	(START)
	1.75 AMPS	193 WATTS	(OPERATING)
	2.00 AMPS	220 WATTS	(MAX.)

THIS GAME IS INTENDED FOR INDOOR USE ONLY

THIS GAME COMPLIES WITH THE APPLICATION REQUIREMENTS OF THE STANDARD FOR AMUSEMENT AND GAMING MACHINES (ANSI / UL 22 - THIRD EDITION).

THIS DEVICE COMPLIES WITH PART 15 OF THE FCC RULES. OPERATION IS SUBJECT TO THE FOLLOWING TWO CONDITIONS: (1) THIS DEVICE MAY NOT CAUSE HARMFUL INTERFERENCE, AND (2) THIS DEVICE MUST ACCEPT ANY INTERFERENCE RECEIVED, INCLUDING INTERFERENCE THAT MAY CAUSE UNDESIRED OPERATION.

GAME CONTENTS

THIS GAME CONTAINS:

1. ONE INSTRUCTION MANUAL
2. OPTIONAL PLAYFIELD (50 PT. JACKPOT)
3. MARS LIGHT ASSY. FOR INSTALLATION

GAME DIMENSIONS

UNBOXED	
HEIGHT REAR:	56"
HEIGHT FRONT:	39.5"
WIDTH:	20.5"
DEPTH:	48"
WEIGHT:	220 LBS.

THIS GAME IS EQUIPPED WITH AN OUTPUT JACK FOR USE WITH THE OPTIONAL "SUPER SONIC JACKPOT" PROGRESSIVE DISPLAY. PLEASE REFER TO THE DIP SWITCH SETTINGS FOR USE OF THIS ACCESSORY.

SONIC PLAYFIELD OPTIONS 50 & 100 JACKPOT
DIP SWITCH SETTINGS

FOR USE IN SETTING THE DIP SWITCH SETTINGS ON THE CPU WHEN USING EITHER THE "100" POINT JACKPOT PLAYFIELD OR THE "50" POINT JACKPOT PLAYFIELD

BE SURE TO USE THE CORRECT PLAYFIELD GRAPHIC OVERLAY WHEN SETTING THE DIP SWITCHES.

	PLAYFIELD	PLAYFIELD
1 PT. TICKET VALUES:	**100 PT JACKPOT**	**50 PT. JACKPOT**
	SW 47 - OFF **SW 48 - OFF**	**SW 47 - OFF** **SW 48 - ON**
1/2 PT. TICKET VALUES	**100 PT. JACKPOT**	**50 PT. JACKPOT**
(For locations using 2 pt. tickets, the game will dispense half as many tickets.)	**SW 47 - ON** **SW 48 - OFF**	**SW 47 - ON** **SW 48 - ON**

MISCELLANEOUS DIP SWITCH SETTINGS

	SW 41	SW 42	SW 43
ATTRACT SOUND ON:			**OFF**
ATTRACT SOUND OFF:			**ON**

NO SUPER SONIC JACKPOT ATTACHED:		**OFF**
SUPER SONIC JACKPOT ATTACHED:		**ON**
3 JACKPOTS TO WIN SUPER SONIC JACKPOT:	**OFF**	
4 JACKPOTS TO WIN SUPER SONIC JACKPOT:	**ON**	

OPERATION AND GAME PLAY

SET UP:

1. REMOVE THE MARS LIGHT FROM WITHIN THE CASH BOX INSIDE THE CABINET.

2. INSTALL THE MARS LIGHT ON THE TOP OF THE BACK BOX OF THE CABINET BY USING THE TWO NO. 6 WOOD SCREWS AND ONE #8 CARRIAGE BOLT FOUND TAPED ON THE BOTTOM OF THE MARS LIGHT. CAREFULLY INSERT THE CABLE FROM THE BOTTOM OF THE MARS LIGHT THROUGH THE HOLE IN THE CABINET TOP. FASTEN SCREWS AND BOLT. FROM INSIDE THE BACK BOX, LOCATE THE MATCHING CONNECTOR HANGING INSIDE AND PUSH TOGETHER. LOCATE THE GREEN GROUNDING WIRE AND ATTACH TO THE BOTTOM OF THE CARRIAGE BOLT. SEE PHOTO.

3. SINCE SHIPPING CAN SOMETIMES CAUSE CONNECTORS TO LOOSEN, DOUBLE CHECK ALL CONNECTORS PRIOR TO OPERATION.

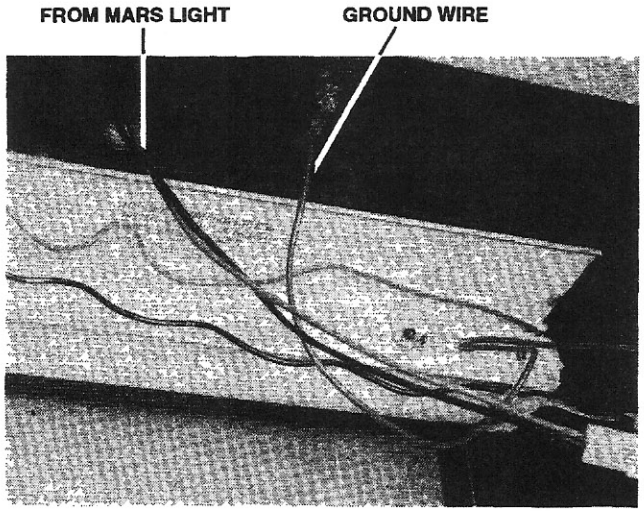

POWER ON:

1. TURN POWER SWITCH TO THE ON POSITION. UPON POWER UP, CPU GREEN LED SHOULD BE FLASHING, RED LED ON THE I.O. BOARD SHOULD BE STEADY ON. THE RED LED ON THE SWITCHING POWER SUPPLY SHOULD ALSO BE ON.

FOLLOWING A SHORT DELAY, THE DISPLAY PANEL SHOULD BEGIN WITH THE VERSION OF GAME SOFTWARE ID, AND THEN BEGIN SONIC ATTRACT MODE. THIS IS A GOOD TIME TO ADJUST YOUR VOLUME LEVEL BY ADJUSTING THE BLUE VOLUME POT LOCATED ON THE CPU IN THE UPPER LEFT HAND SIDE.

YOUR GAME MUST BE LEVELED!

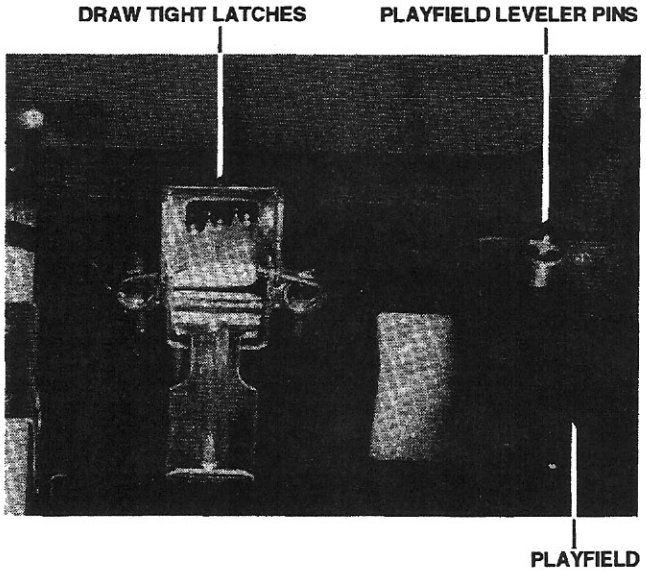

2. LEVEL THE GAME AND PLAYFIELD

FIRST LEVEL THE GAME CABINET BY ADJUSTING THE LEG LEVELERS ON THE FOUR CORNERS OF THE CABINET AND CHECKING WITH AN ORDINARY CARPENTERS LEVEL.

AFTER LEVELING THE CABINET, LEVEL THE PLAYFIELD BY ADJUSTING THE LEFT & RIGHT LEVELER PINS AT EACH SIDE OF THE PLAYFIELD TOWARDS THE FRONT OF THE CABINET. THE PLAYFIELD SHOULD BE LEVELED ACROSS FROM LEFT TO RIGHT, NOT FRONT TO BACK. SEE PHOTO. OPEN THE FRONT CABINET DOOR. RELEASE THE TWO DRAW LATCHES ON EITHER SIDE OF THE CABINET INSIDE THE HINGED CONTROL PANEL. SLOWLY LOWER THE CONTROL PANEL DOWNWARDS TO ACCESS THE PLAYFIELD. REMOVE THE GLASS BY PULLING TOWARDS THE FRONT.

3. BE SURE TO CHECK THAT THE EXIT OF THE COIN RAMP RESTS ON THE SURFACE OF THE PLAYFIELD. ADJUST THE LEVELERS EQUALLY TO MAKE ADJUSTMENTS IN THE ELEVATION OF THE PLAYFIELD AS WELL.

TEST THE TRAVEL OF A COIN OR TOKEN FROM THE COIN EXIT THROUGH THE COIN MECHANISM. IF COINS SHOULD NOT TRAVEL DIRECTLY DOWN THE PLAYFIELD, MAKE ADJUSTMENTS TO THE ANGLE OF TRAVEL LEFT OR RIGHT, BY LOOSENING THE SLIDING ADJUSTMENT BRACKET ON THE INSIDE FACE OF THE CONTROL PANEL AND TIGHTENING IN POSITION.

4. CHECK THE PLAYFIELD FOR ANY LOOSE PACKING OR OBSTRUCTIONS WHICH MAY HAVE FALLEN INTO THE GAME DURING SHIPMENT. REPLACE THE GLASS AND RAISE THE CONTROL PANEL UPWARDS. DO NOT FORGET TO ATTACH THE DRAW LATCHES.

NOTE: NEVER MOVE OR PULL THE GAME CABINET BY THE CONTROL PANEL. THIS MAY WEAKEN THE DRAW LATCHES.

5. INSTALL TICKETS THROUGH THE TICKET DOOR.

GAME AUDIT FUNCTIONS

AUDIT TABLES:

ON THE INSIDE OF THE FRONT CABINET DOOR, YOU WILL FIND THE AUDIT TABLE ACCESS BUTTON. DEPRESS THIS BUTTON ONCE TO ENTER THE AUDIT DISPLAY FOR BOOKKEEPING AND PLAY SETTINGS.

DEPRESSING ONCE ENTERS THE AUDIT TABLE. DEPRESS AGAIN TO CYCLE THROUGH THE DESIRED TABLES. TOTAL COINS, TOTAL TICKETS, TOTAL JACKPOTS, AVERAGE TICKET PAYOUT, AND PLAYFIELD SPEED LEVEL MONITOR DISPLAYS ARE SHOWN.

TO RESET AUDIT TABLES FOR DAILY OR WEEKLY ACCOUNTING, DISPLAY THE DESIRED AUDIT TABLE BY DEPRESSING THE AUDIT ACCESS BUTTON. THEN, DEPRESS THE AUDIT TABLE CLEAR BUTTON FOUND INSIDE THE TICKET DOOR TO ZERO OUT THE TABLE. EACH TABLE MAY BE RESET IN THIS MANNER.

PLAYFIELD SPEED CONTROL

PERCENTAGING THE GAME

THE PLAYFIELD SPEED SETTING ADJUSTS THE PAYOUT PERCENTAGE OF THE GAME BY ADJUSTING THE SKILL REQUIREMENTS TO ACCURATELY CAPTURE A DESIRED TARGET IN THE TIMING OF THE PLAYFIELD CYCLING RATE.

THE PLAYFIELD CYCLE RATE (SPEED) MAY BE ADJUSTED BY ENTERING INTO THE AUDIT TABLES TO THE SPEED SETTING AND THEN TURNING THE PLAYFIELD CYCLE RATE ADJUSTMENT DIAL TO THE DESIRED SETTING SHOWN IN THE DISPLAY. THE FASTER THE PLAYFIELD SETTING, THE HARDER THE GAME IS TO PLAY.

THE CYCLE RATE ADJUSTMENT KNOB IS LOCATED ON THE FRONT DOOR NEXT TO THE AUDIT TABLE ACCESS BUTTON. ADJUST UP OR DOWN FOR SPEED SETTINGS DISPLAYED IN THE DISPLAY PANEL WHEN ENTERED INTO THE "SPEED" SETTING.

THE RECOMMENDED FACTORY SETTING IS 4.

DEPRESS AGAIN FOLLOWING THE SPEED TABLE AND THE GAME WILL RETURN TO NORMAL PLAY.

UNPAID TICKETS

WHEN THE TICKET DISPENSER IS LOW ON TICKETS, THE LOW TICKET INDICATOR LED ON THE TICKET DOOR WILL LIGHT.

IN THE EVENT A TICKET DISPENSER SHOULD RUN OUT OF TICKETS IN THE MIDDLE OF AN AWARD, THE UNPAID BALANCE OF TICKETS WILL BE HELD IN MEMORY UNTIL A NEW BUNDLE OF TICKETS HAVE BEEN INSTALLED AND THE UNPAID TICKET BALANCE DISPENSE BUTTON LOCATED INSIDE THE TICKET DOOR HAS BEEN DEPRESSED.

WHEN A TICKET DISPENSER RUNS OUT OF TICKETS, THE DISPLAY WILL FLASH "OUT OF TIX" UNTIL A NEW TICKET SUPPLY HAS BEEN INSTALLED AND THE BALANCE PAID.

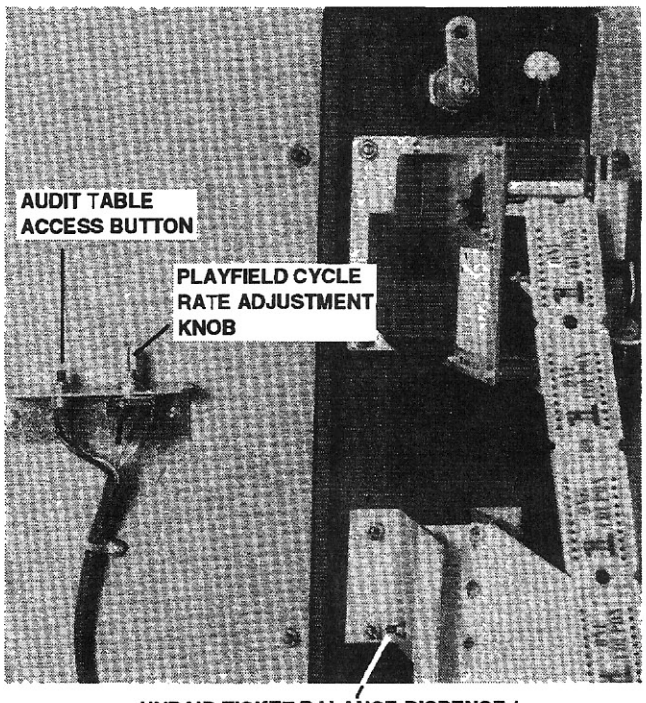

**UNPAID TICKET BALANCE DISPENSE /
SUPER SONIC JACKPOT RESET (ACCESSORY)**

SUPER SONIC JACKPOT

* THIS IS AN ACCESSORY AVAILABLE FROM YOUR SEGA DISTRIBUTOR FOR USE ON YOUR SONIC GAME.

WHEN USING A "SUPER SONIC JACKPOT" ACCESSORY DISPLAY, THE BUTTON LOCATED INSIDE THE TICKET DOOR IS ALSO USED TO RESET THE GAME FOLLOWING THE "SUPER SONIC JACKPOT" WIN SCENARIO.

THE "SUPER SONIC JACKPOT" ACCESSORY IS CONNECTED TO THE BACK DOOR OF THE GAME CABINET BY CONNECTING THE COMMUNICATION CABLE INTO THE RCA JACK LOCATED ON THE SWITCH PANEL.

BE SURE TO EXCHANGE THE SOFTWARE ROM SUPPLIED WITH THE JACKPOT ACCESSORY KIT WITH THE GAME ROM INSTALLED ON THE CPU. THIS NEW ROM CONTAINS ALL OF THE EXISTING SONIC SOFTWARE AND ADDS THE JACKPOT COMMUNICATION SOFTWARE AS WELL.

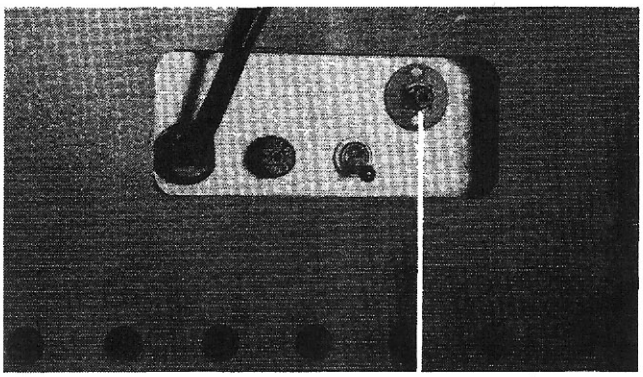

SUPER SONIC JACKPOT ACCESSORY RCA JACK

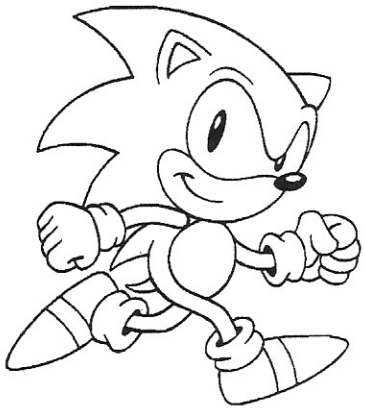

SONIC THE HEDGEHOG BASIC GAMEPLAY

1. THE CONCEPT OF "SONIC THE HEDGEHOG" IS TO EFFECTIVELY TIME THE RELEASE OF YOUR COIN TO CAPTURE THE MOVING LIGHTED PLAYFIELD LOCATION. EACH TARGET ZONE DISPLAYS A DIFFERENT TICKET VALUE. WHEN A TARGET ZONE IS LIT, IT IS ACTIVE AND ANY COIN PASSING OVER A LIT TARGET ZONE WILL AWARD THAT TARGET ZONE VALUE DISPLAYED. SIMPLY TIME THE RELEASE OF YOUR COIN TO ROLL ACROSS THE DESIRED TICKET VALUE WHEN IT IS LIGHTED ON THE PLAYFIELD. PLAYFIELD TARGETS ARE SURROUNDED BY OPTO SWITCHES WHICH DETECT THE PRESENCE OF A ROLLING COIN WHEN IT IS WITHIN AN ACTIVE (LIT) TARGET ZONE.

2. THE GAME IS ACTIVATED ONCE A COIN ENTERS THE COIN MECHANISM TO SCORE.

3. ONCE A TARGET IS SCORED, THAT TICKET VALUE DISPLAYED WILL BE DISPENSED. EVEN DURING TICKET PAYOUT, A NEW GAME MAY BE STARTED BY ENTERING A NEW COIN WHICH WILL IMMEDIATELY START THE PLAYFIELD CYCLING.

4. WHEN USING THE ACCESSORY "SUPER SONIC JACKPOT", THE GAME MAY BE SET TO AWARD THE SUPER JACKPOT BY SCORING EITHER THREE OR FOUR CONSECUTIVE JACKPOTS IN A ROW DEPENDING ON THE DIP SWITCH SETTINGS FOR THE SUPER JACKPOT. ONCE THE "SUPER SONIC JACKPOT" HAS BEEN WON, THE OPERATOR MUST RESET THE GAME BY DEPRESSING THE SUPER SONIC JACKPOT REST BUTTON LOCATED INSIDE THE TICKET DOOR.

CHANGING THE PLAYFIELD OVERLAY

1. YOUR SONIC GAME COMES WITH THE OPTION OF OPERATING A PLAYFIELD WITH HIGHER OR LOWER TARGET VALUES IDENTIFIED BY EITHER A "100" JACKPOT OR "50" JACKPOT FEATURED AT THE TOP OF THE OVERLAY.

2. LOWER THE CONTROL PANEL BY RELEASING THE DRAW TIGHT LATCHES LOCATED INSIDE THE CABINET AT BOTH SIDES OF THE CONTROL PANEL. TILT THE CONTROL PANEL DOWN CAREFULLY UNTIL IT RESTS ON THE FRONT DOOR.

3. THE PLAYFIELD OVERLAY IS SIMPLY MOUNTED ON THE TWO PINS LOCATED AT THE BEGINNING OF THE OVERLAY WHERE IT IS ATTACHED TO THE PLAYFIELD. SIMPLY LIFT THE PLAYFIELD OVERLAY UPWARDS OFF OF THE PINS AND SLIDE BACK FROM BENEATH THE PLASTIC POSTS RESTING ON THE SURFACE AT BOTH SIDES OF THE PLAYFIELD.

4. INSTALL THE NEW PLAYFIELD BY GENTLY LIFTING THE EDGE OF THE PLAYFIELD PLASTICS AND SLIPPING THE OVERLAY BENEATH THE PLASTIC POSTS. ONCE IN LINE WITH THE PLAYFIELD, LOCATE THE PLAYFIELD PINS THROUGH THE MOUNTING HOLES AT THE END OF THE PLAYFIELD.

5. BE SURE TO VERIFY THE DIP SWITCH SETTINGS THAT MATCH THE JACKPOT VALUE OF YOUR OVERLAY.

PLAYFIELD LAMP REPLACEMENT

1. THE PLAYFIELD LAMPS ARE LOCATED ON LAMP BOARDS WHICH ARE MOUNTED ON THE UNDERSIDE OF THE PLAYFIELD. SIMPLY TWIST THE SOCKET COUNTER CLOCKWISE TO REMOVE AND REPLACE THE BULB.

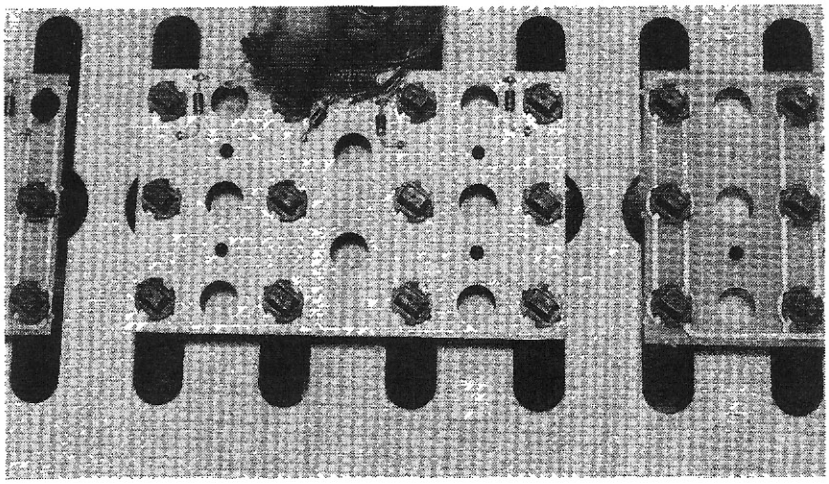

PLAYFIELD OPTO BOARD LOCATIONS

AT EITHER SIDE OF THE PLAYFIELD, OPTO BOARDS ARE MOUNTED TO THE RAILS WHICH ARE FASTENED DIRECTLY TO THE PLAYFIELD. THE OPTO BOARDS MAY BE REMOVED IN FOUR PIECES IF SERVICE IS NECESSARY. IT IS NOT NECESSARY TO REPLACE ALL FOUR OPTO BOARDS IN THE EVENT OF ANY NECESSARY SERVICE.

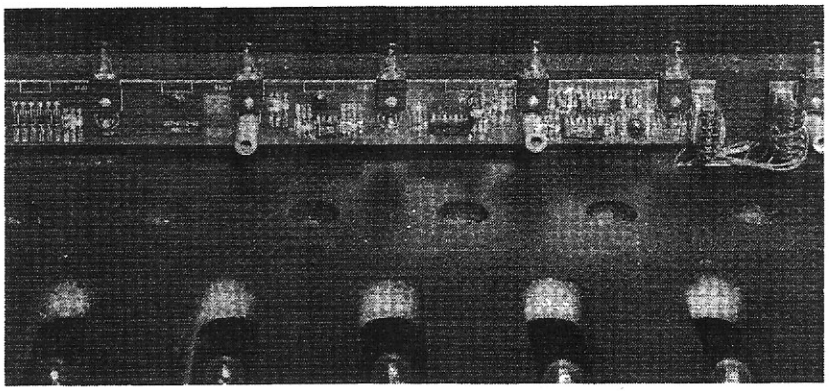

COIN AND TICKET METERS ARE LOCATED INSIDE THE TICKET DOOR ON THE SIDE OF THE TICKET BIN.

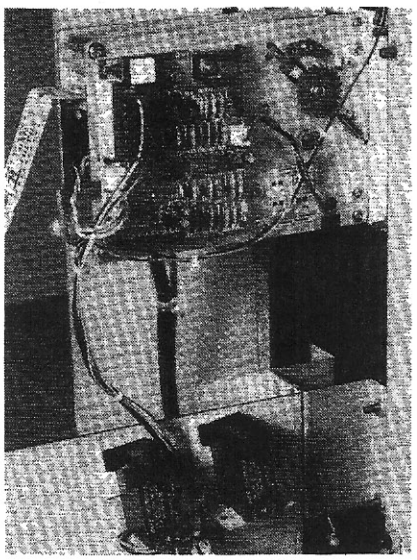

COIN & TICKET METERS

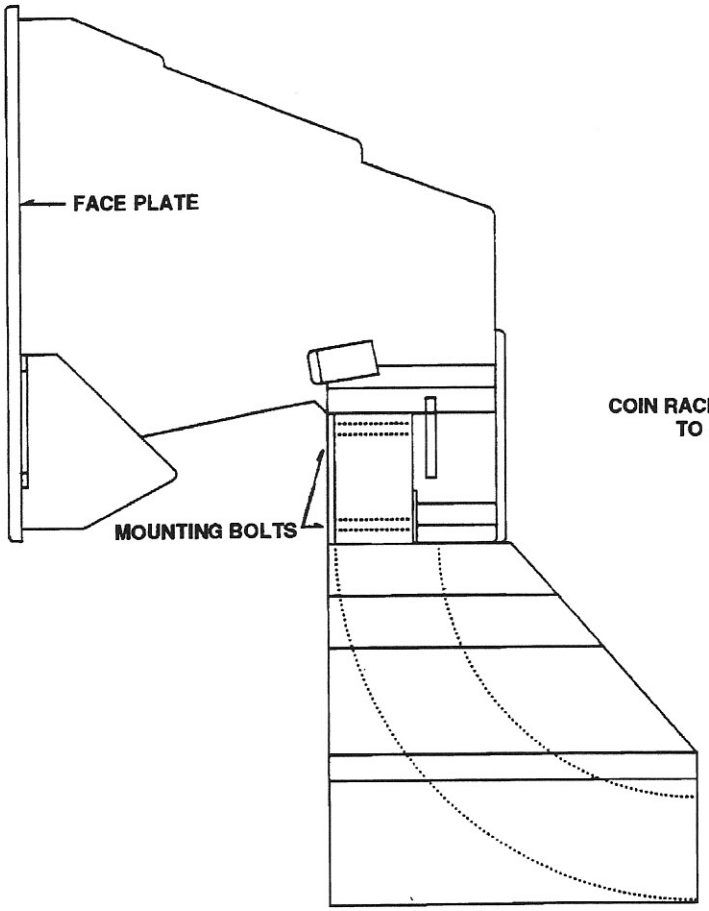

COIN SELECTOR W/ RACEWAY ATTACHED (SIDE VIEW)

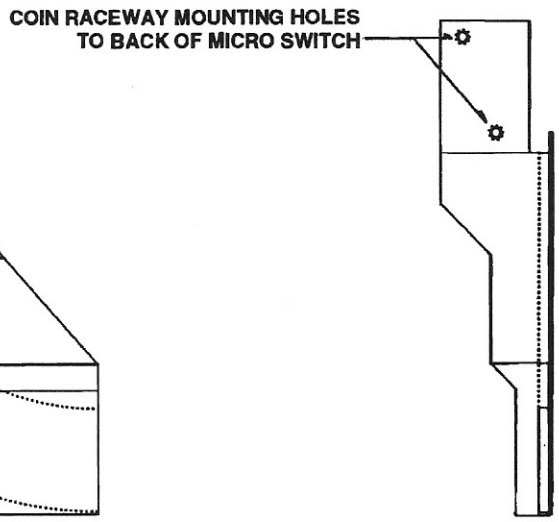

COIN RACEWAY (FRONT)

Removal of the Asahi-Seiko Coin Selector
Model # 730 - A/B

1. UNLOCK THE DRAW LATCHES FROM INSIDE THE CONTROL PANEL. CAREFULLY, TILT THE CONTROL PANEL FORWARD UNTIL IT RESTS AGAINST THE FRONT DOOR.

2. REMOVE WIRES FROM THE MICRO SWITCH. THEN, REMOVE THE GROUND WIRE FROM THE MOUNTING BOLT.

3. REMOVE THE REMAINING 3 NUTS FROM THE MOUNTING BOLTS.

4. WHILE HOLDING THE COIN SELECTOR FROM INSIDE THE CABINET, TIP THE CONTROL PANEL UPWARDS IN ORDER TO GRASP THE FACE OF THE COIN SELECTOR. FROM THE FRONT OF THE CONTROL PANEL, PULL THE SELECTOR FORWARD AND DOWN. ONCE THE SELECTOR HAS CLEARED THE CONTROL PANEL OPENING, PULL STRAIGHT OUT TO CLEAR THE COIN RACEWAY ATTACHED.

5. REMOVE THE COIN RACEWAY BY UNSCREWING THE TWO MOUNTING BOLTS ON THE BACK OF THE MICRO SWITCH BELOW THE SELECTOR. REMOVE THE MICRO SWITCH MOUNTING BOLTS ON THE NEW SELECTOR AND REPLACE THEM WITH THE COIN RACEWAY BOLTS, MOUNTING THE COIN RACEWAY ON THE NEW SELECTOR.

6. REINSTALL IN THE SAME MANNER AS ABOVE. DO NOT FORGET TO REATTACH THE WIRES TO THE MICRO SWITCH AND THE GROUND WIRE.

SONIC CABINET BACK DOOR COMPONENTS

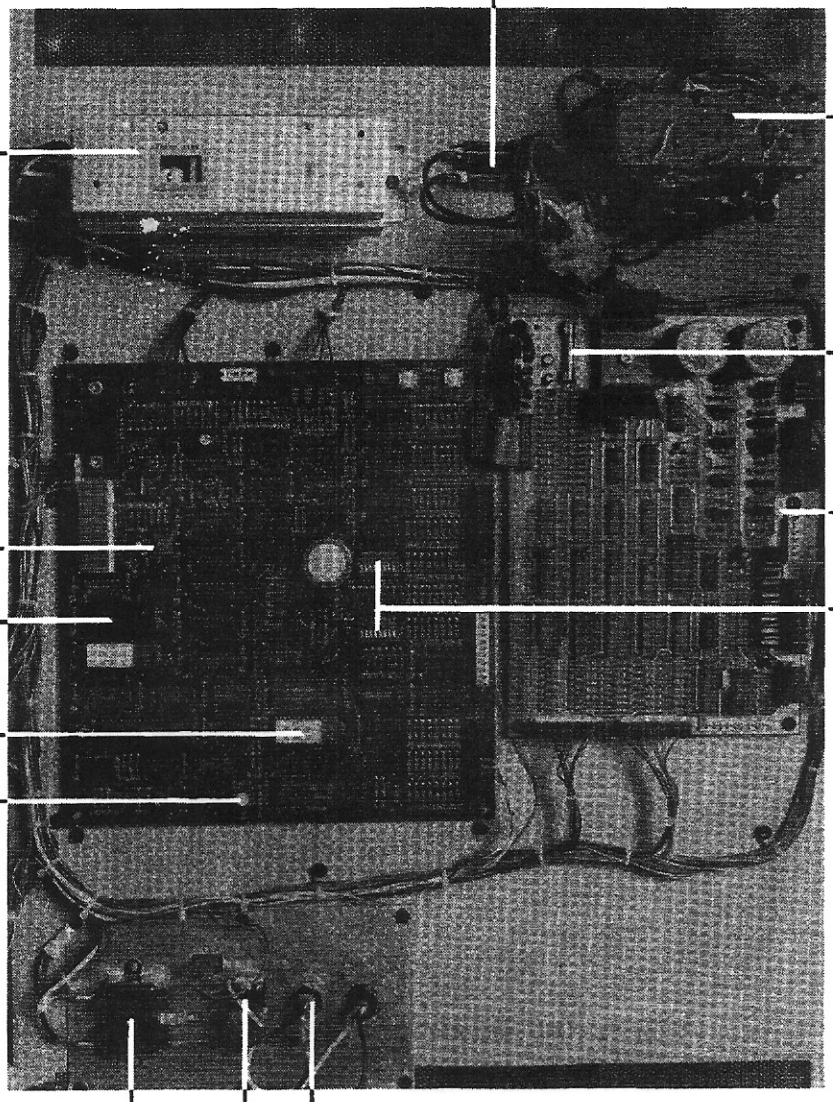

SONIC CABINET BACK DOOR COMPONENTS

SONIC LOGIC, COMPONENT, & PIN LOCATIONS

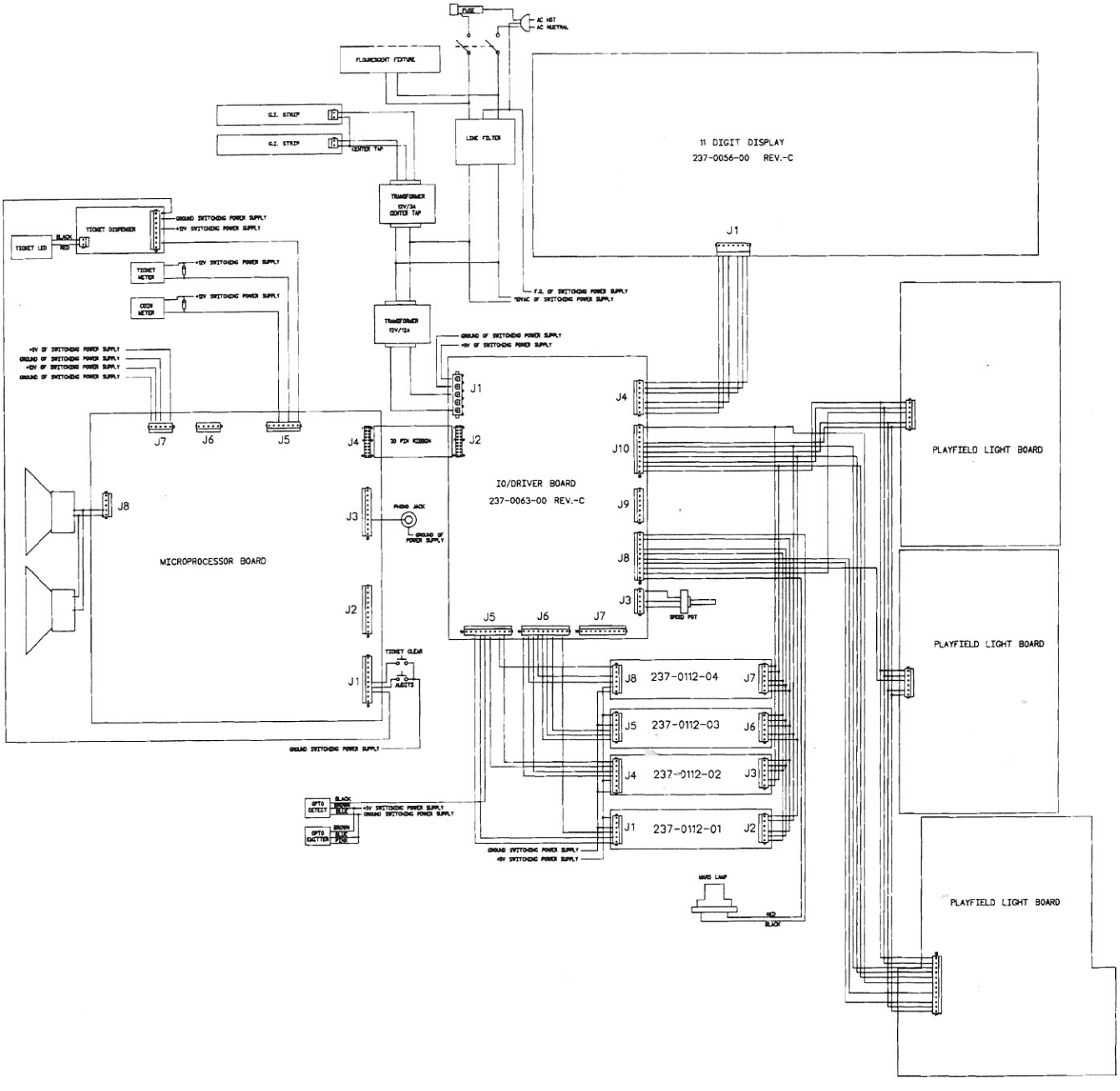

237-0063-00
REV.-D
74LS74
74LS245
74LS273
74LS138
74LS157
74LS151
74LS374
74LS30
4040
HC245
HC04
ULN2003
6116
4094
4MHZ
10A SB

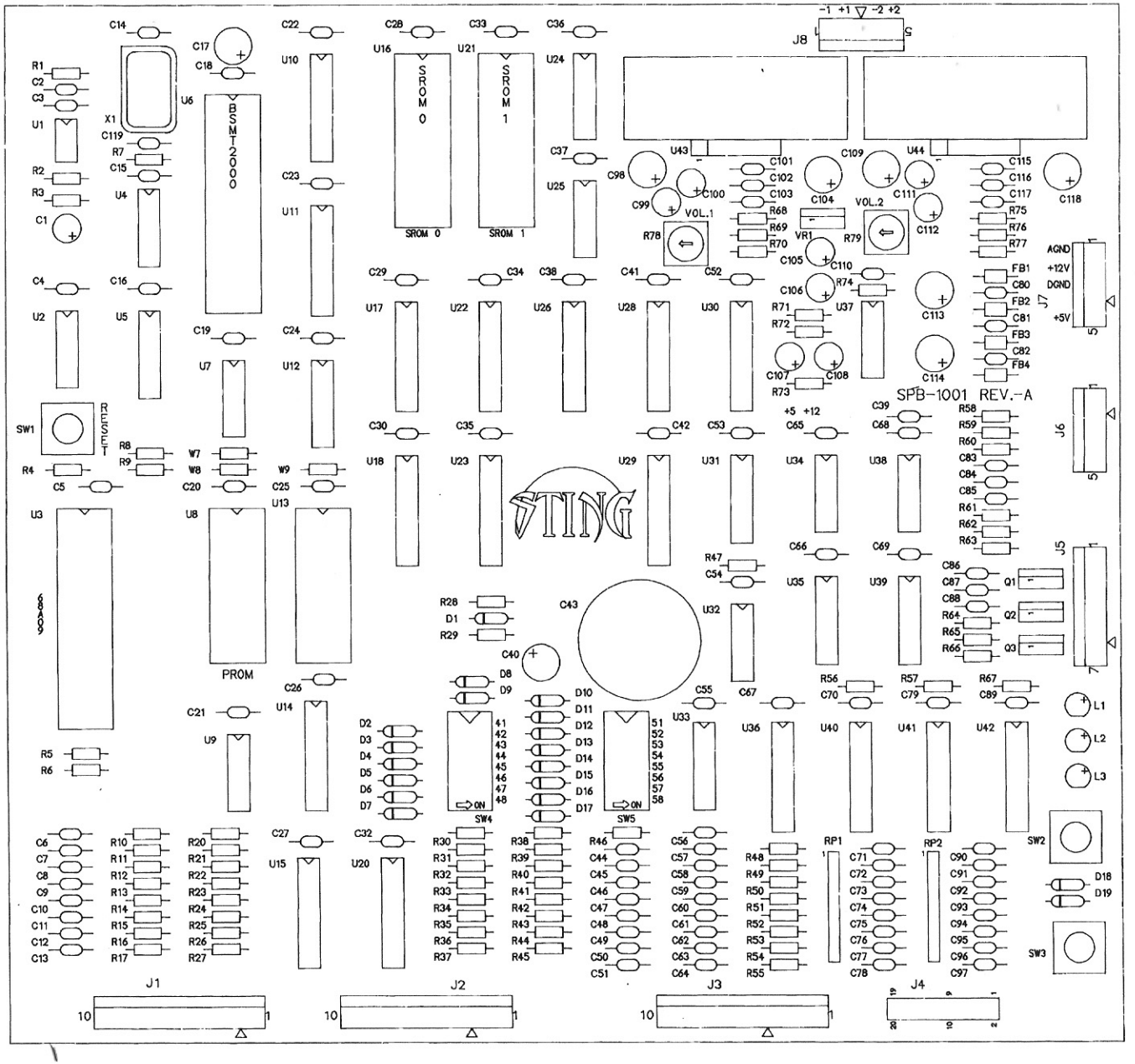
SPB-1001 REV.-A
STING
SROM 0
SROM 1
PROM
VOL.1
VOL.2
AGND
+12V
DGND
+5V
RESET
J1
J2
J3
J4
J5
J6
J7
J8
SW1
SW2
SW3
SW4
SW5
RP1
RP2

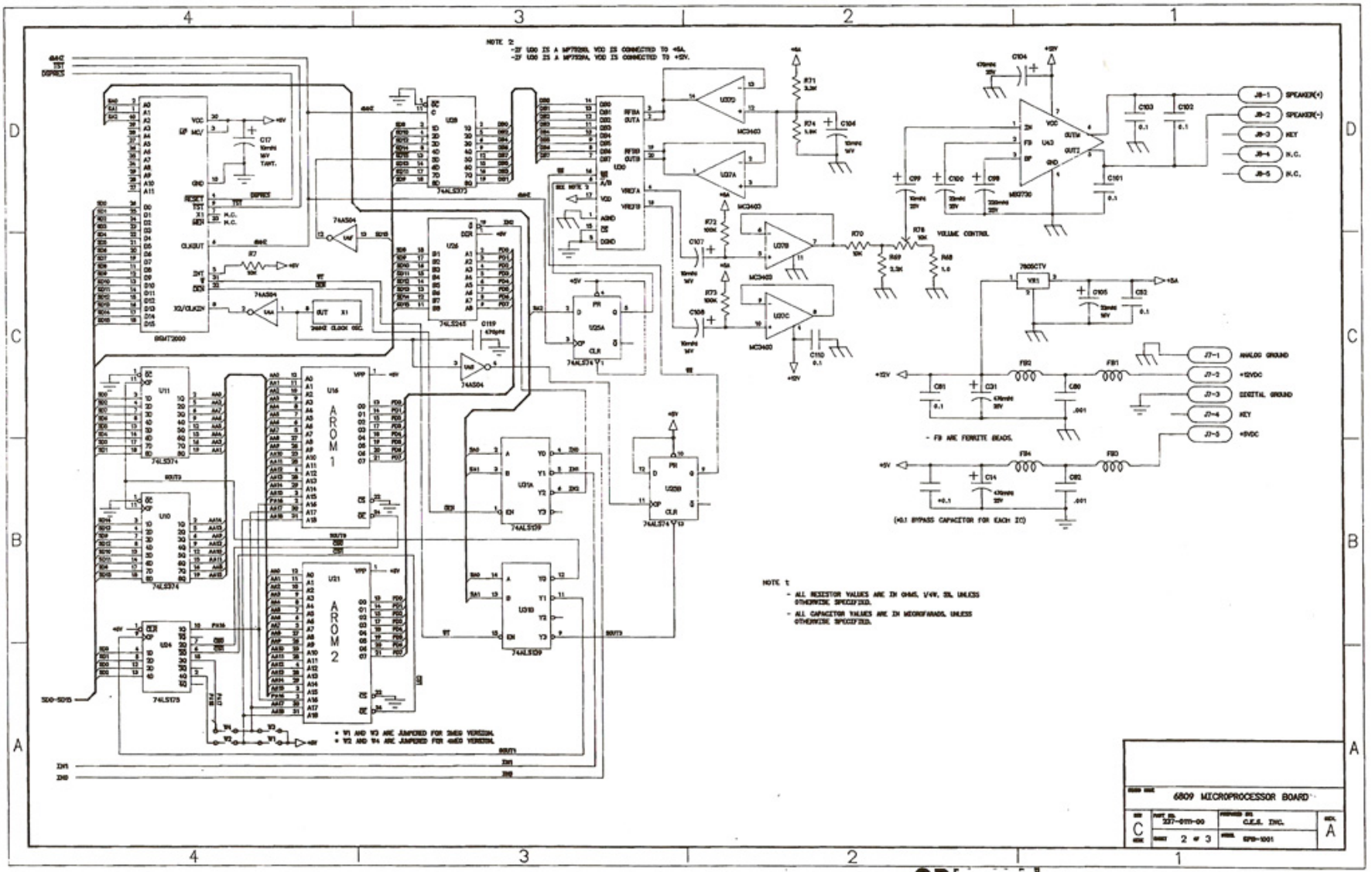
6809 MICROPROCESSOR BOARD
C
237-0111-00
2 of 3
C.E.S. INC.
SPB-1001
A
AROM 1
AROM 2
VOLUME CONTROL
ANALOG GROUND
+12VDC
DIGITAL GROUND
KEY
+5VDC
SPEAKER(+)
SPEAKER(-)
KEY
N.C.
N.C.
- FB ARE FERRITE BEADS.
(+0.1 BYPASS CAPACITOR FOR EACH IC)
* V1 AND V3 ARE JUMPERED FOR 2MHz VERSION.
* V2 AND V4 ARE JUMPERED FOR 4MHz VERSION.

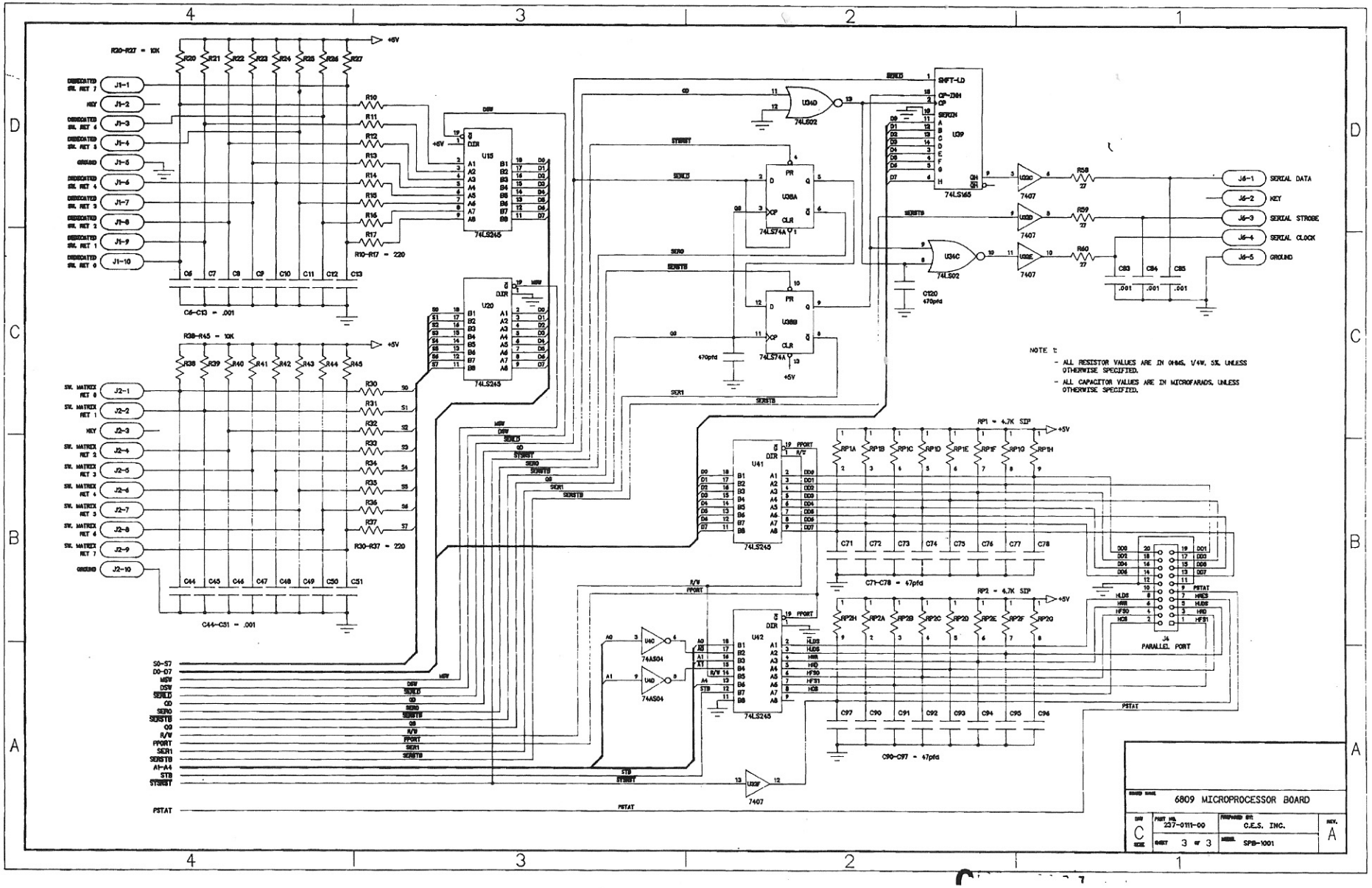

NOTE 1:
- ALL RESISTOR VALUES ARE IN OHMS, 1/4W, 5%, UNLESS OTHERWISE SPECIFIED.
- ALL CAPACITOR VALUES ARE IN MICROFARADS, UNLESS OTHERWISE SPECIFIED.
SERIAL DATA
KEY
SERIAL STROBE
SERIAL CLOCK
GROUND
J4 PARALLEL PORT
6809 MICROPROCESSOR BOARD
C.E.S. INC.
SPB-1001
237-0111-00
3 of 3
A

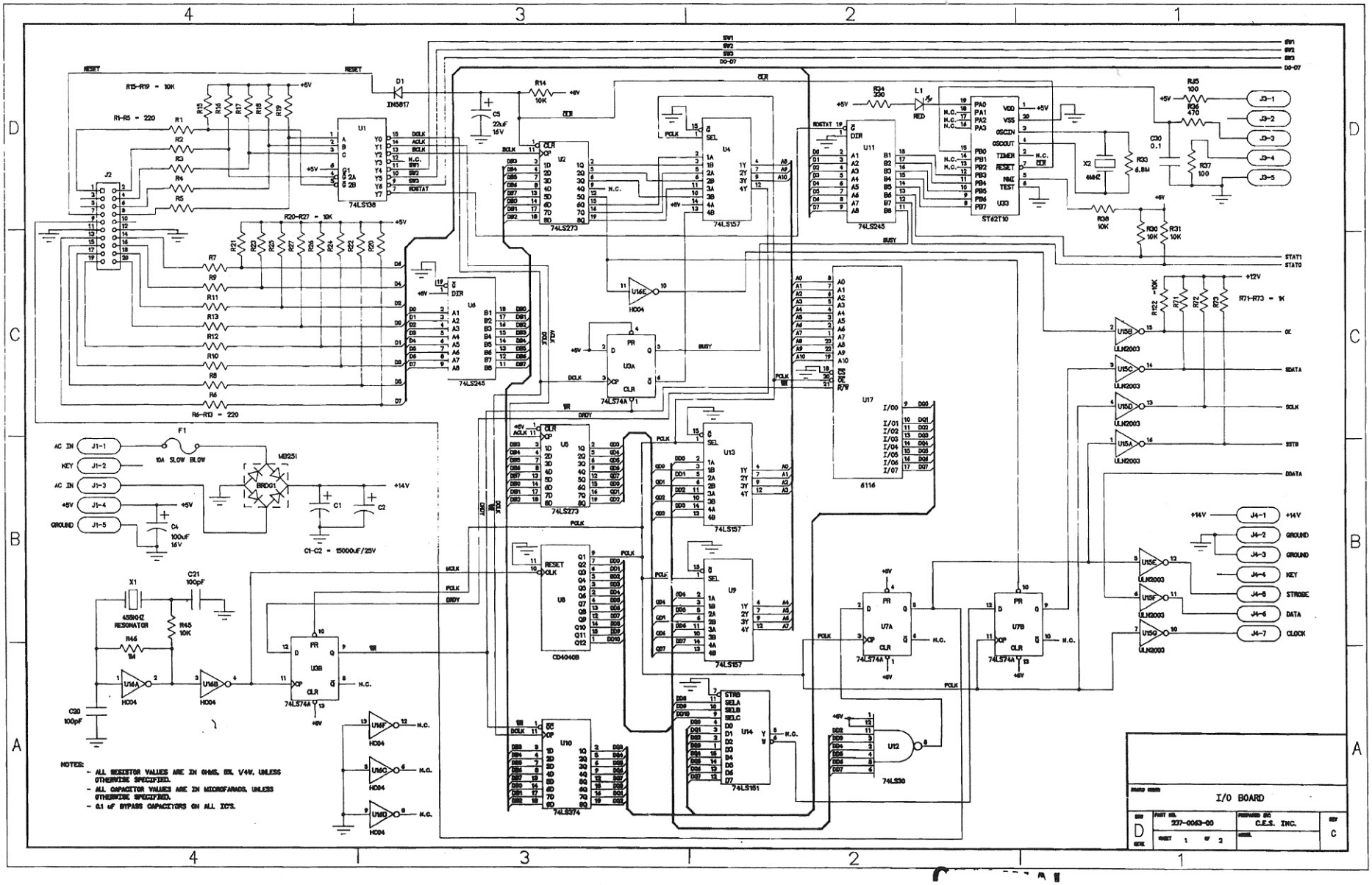
I/O BOARD
C.E.S. INC.
237-0063-00
NOTES:
- ALL RESISTOR VALUES ARE IN OHMS, 5%, 1/4W, UNLESS OTHERWISE SPECIFIED.
- ALL CAPACITOR VALUES ARE IN MICROFARADS, UNLESS OTHERWISE SPECIFIED.
- 0.1 uF BYPASS CAPACITORS ON ALL IC'S.

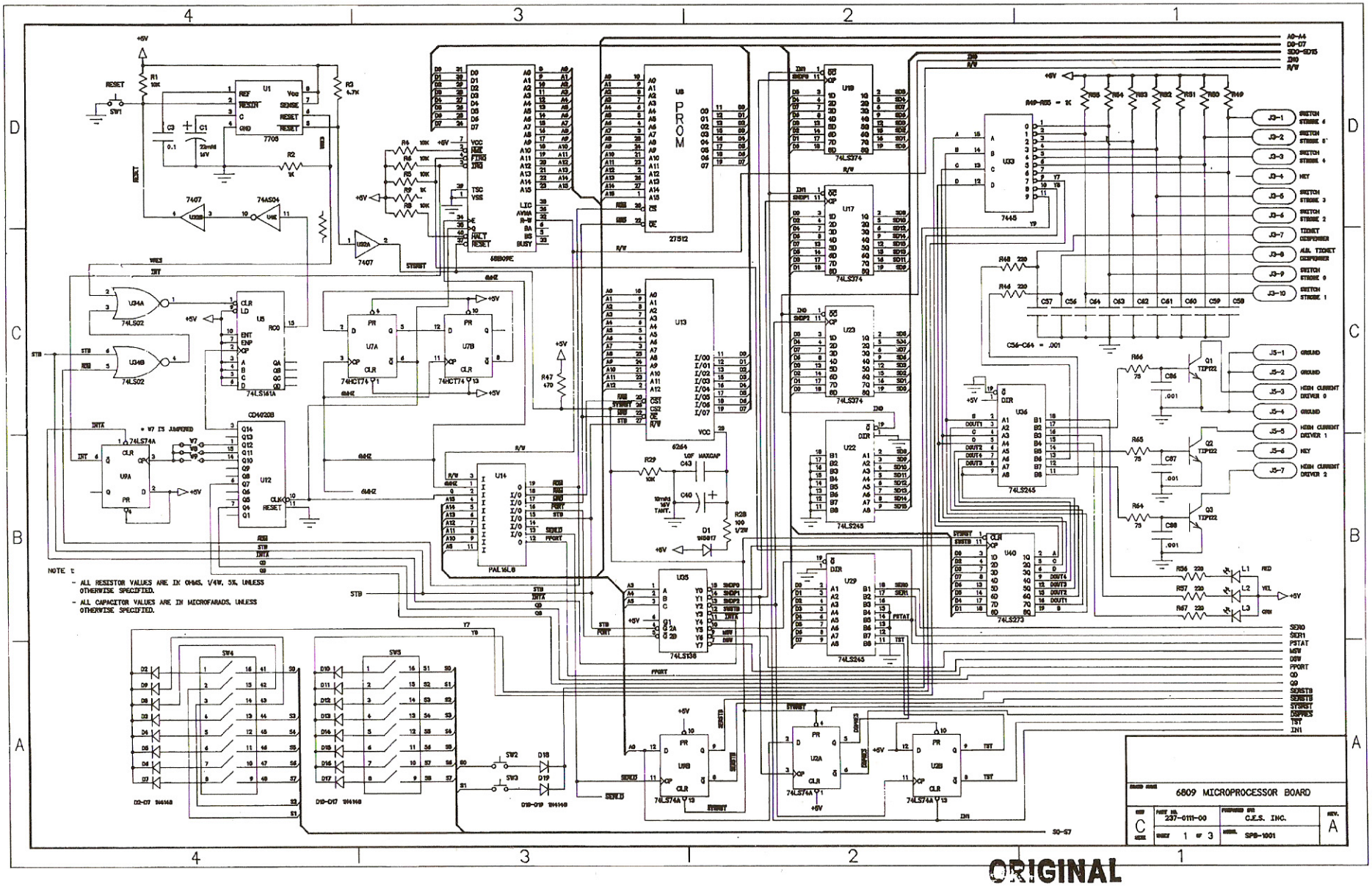
NOTE :
- ALL RESISTOR VALUES ARE IN OHMS, 1/4W, 5%, UNLESS OTHERWISE SPECIFIED.
- ALL CAPACITOR VALUES ARE IN MICROFARADS, UNLESS OTHERWISE SPECIFIED.
6809 MICROPROCESSOR BOARD
C
237-0111-00
C.E.S. INC.
A
1 of 3
SPB-1001

ORIGINAL

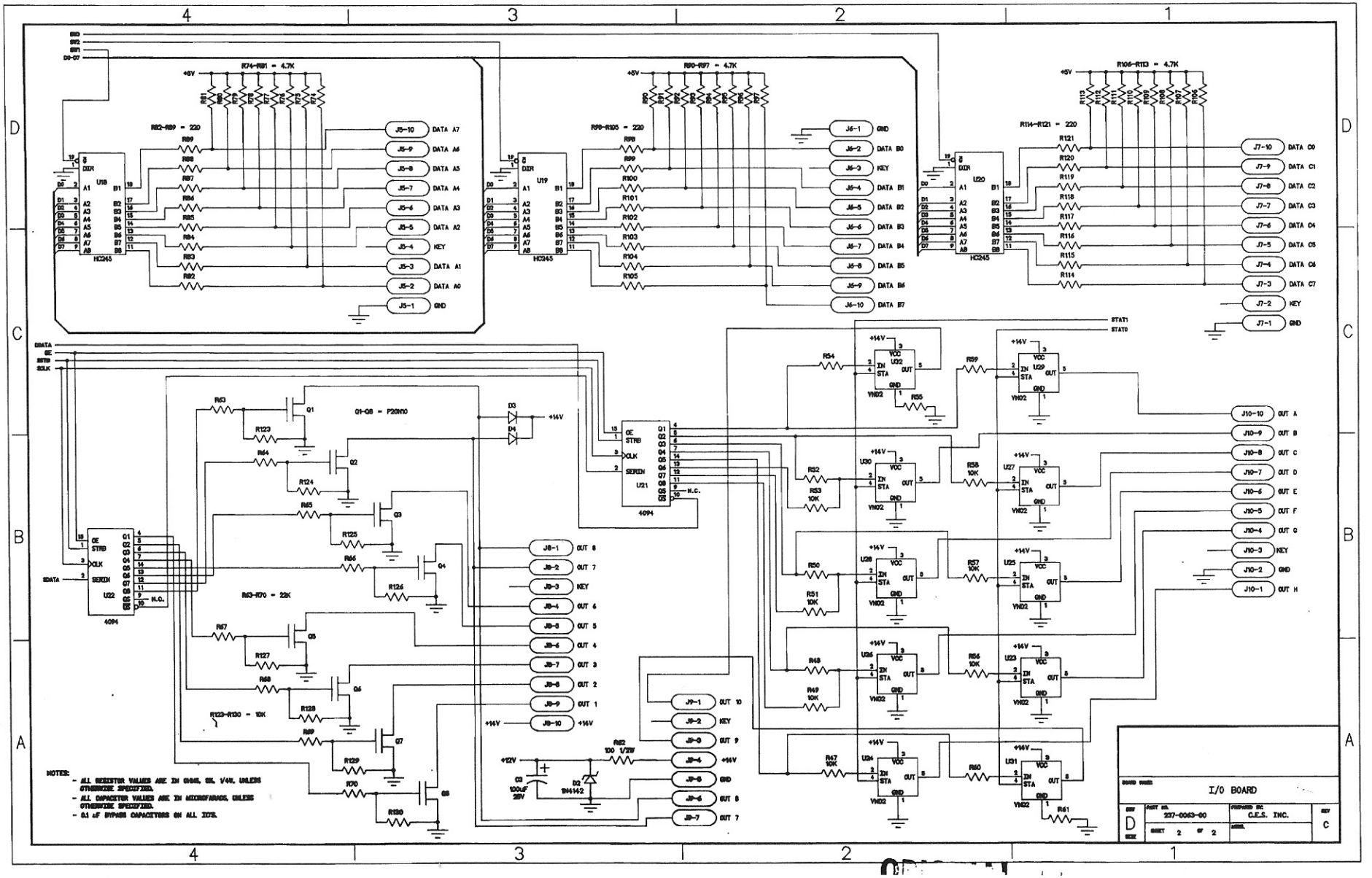

R74-R81 = 4.7K
R82-R89 = 220
R90-R97 = 4.7K
R98-R105 = 220
R106-R113 = 4.7K
R114-R121 = 220
U18
U19
U20
HC245
Q1-Q8 = P20N10
R63-R70 = 22K
R123-R130 = 10K
U21
U22
4094
U32
U29
U30
U27
U28
U25
U26
U23
U24
U31
VN02
STAT1
STAT0
NOTES:
- ALL RESISTOR VALUES ARE IN OHMS, 5%, 1/4W, UNLESS OTHERWISE SPECIFIED.
- ALL CAPACITOR VALUES ARE IN MICROFARADS, UNLESS OTHERWISE SPECIFIED.
- 0.1 uF BYPASS CAPACITORS ON ALL IC'S.
I/O BOARD
237-0063-00
C.E.S. INC.
D
C
SHEET 2 OF 2

Micro-processor Board

Connector	J1-1	N/C
	J1-2	N/C
	J1-3	N/C
	J1-4	N/C
	J1-5	N/C
	J1-6	Ticket Reset Button WHT BRN
	J1-7	Audit Button WHT BLK
	J1-8	Ticket Dispenser pin 1 WHT RED
	J1-9	N/C
	J1-10	N/C
Connector	J2-1	N/C
	J2-2	N/C
	J2-3	N/C
	J2-4	N/C
	J2-4	N/C
	J2-5	N/C
	J2-6	N/C
	J2-7	N/C
	J2-8	N/C
	J2-9	N/C
	J2-10	N/C
Connector	J3-1	N/C
	J3-2	N/C
	J3-3	N/C
	J3-4	N/C
	J3-5	N/C
	J3-6	N/C
	J3-7	Progressive Communication Jack BLU GRN
	J3-8	N/C
	J3-9	N/C
	J3-10	N/C
Connector	J4-1	20 Pin Ribbon
	J4-2	20 Pin Ribbon
	J4-3	20 Pin Ribbon
	J4-4	20 Pin Ribbon
	J4-5	20 Pin Ribbon
	J4-6	20 Pin Ribbon
	J4-7	20 Pin Ribbon
	J4-8	20 Pin Ribbon
	J4-9	20 Pin Ribbon
	J4-10	20 Pin Ribbon
	J4-11	20 Pin Ribbon
	J4-12	20 Pin Ribbon
	J4-13	20 Pin Ribbon
	J4-14	20 Pin Ribbon
	J4-15	20 Pin Ribbon
	J4-16	20 Pin Ribbon
	J4-17	20 Pin Ribbon
	J4-18	20 Pin Ribbon
	J4-19	20 Pin Ribbon
	J4-20	20 Pin Ribbon
Connector	J5-1	N/C
	J5-2	N/C
	J5-3	Coin Meter GRY YEL
	J5-4	N/C
	J5-5	Ticket Meter GRY ORG
	J5-6	N/C
	J5-7	Ticket Dispenser - Control Switch GRY RED
Connector	J6-1	N/C
	J6-2	N/C
	J6-3	N/C

Micro Processor Board (cont)

Connector	J6-4	N/C
	J6-5	N/C
Connector	J7-1	Ground of Switching Power Supply BRN BLK
	J7-2	+12V of Switching Power Supply BRN
	J7-3	Ground of Switching Power Supply BLK
	J7-4	N/C
	J7-5	+5V of Switching Power Supply RED
Connector	J8-1	Negative Speaker BLU
	J8-2	Positive Speaker PNK
	J8-3	N/C
	J8-4	N/C
	J8-5	N/C

IO / Driver Board

Connector	J1-1	+5V of Switching Power Supply RED
	J1-2	Ground of Switching Power Supply BLK
	J1-3	12V/12Amp Transformer RED BLK
	J1-4	N/C
	J1-5	12V/12Amp Transformer RED BLK
Connector	J2-1	20 Pin Ribbon
	J2-2	20 Pin Ribbon
	J2-3	20 Pin Ribbon
	J2-4	20 Pin Ribbon
	J2-5	20 Pin Ribbon
	J2-6	20 Pin Ribbon
	J2-7	20 Pin Ribbon
	J2-8	20 Pin Ribbon
	J2-9	20 Pin Ribbon
	J2-10	20 Pin Ribbon
	J2-11	20 Pin Ribbon
	J2-12	20 Pin Ribbon
	J2-13	20 Pin Ribbon
	J2-14	20 Pin Ribbon
	J2-15	20 Pin Ribbon
	J2-16	20 Pin Ribbon
	J2-17	20 Pin Ribbon
	J2-18	20 Pin Ribbon
	J2-19	20 Pin Ribbon
	J2-20	20 Pin Ribbon
Connector	J3-1	Speed Pot BLU RED
	J3-2	N/C
	J3-3	Speed Pot BLU YEL
	J3-4	Speed Pot BLU WHT
	J3-5	N/C
Connector	J4-1	Display PUR
	J4-2	Display GRN BLK
	J4-3	Display GRN BLK
	J4-4	N/C
	J4-5	Display YEL BLK
	J4-6	Display YEL GRN
	J4-7	Display YEL RED
Connector	J5-1	N/C
	J5-2	OPTO J4-7 ORG BLU
	J5-3	OPTO J8-6 BLK RED
	J5-4	N/C
	J5-5	OPTO J4-6 ORG GRN
	J5-6	Micro Switch/Coin Drop BLK YEL
	J5-7	OPTO J1-2 BLK WHT
	J5-8	OPTO J1-1 BLK GRN

IO Driver Board (cont)

Connector	J5-9	N/C	
	J5-10	N/C	
Connector	J6-1	N/C	
	J6-2	OPTO J1-3	ORG BLK
	J6-3	N/C	
	J6-4	OPTO J5-3	ORG WHT
	J6-5	OPTO J5-2	ORG GRY
	J6-6	OPTO J5-1	ORG PUR
	J6-7	OPTO J8-4	ORG YEL
Connector	J6-8	OPTO J4-5	ORG BLK
	J6-9	OPTO J8-3	ORG RED
	J6-10	OPTO J4-4	BLK TAN
Connector	J7-1	N/C	
	J7-2	N/C	
	J7-3	N/C	
	J7-4	N/C	
	J7-5	N/C	
	J7-6	N/C	
	J7-7	N/C	
	J7-8	N/C	
	J7-9	N/C	
	J7-10	N/C	
Connector	J8-1	Mars Lamp	GRN RED
	J8-2	OPTO J7-6, J6-3, J3-1, J2-4	YEL GRN
	J8-3	N/C	
	J8-4	OPTO J7-5, J6-2, J3-2, J2-5	YEL PUR
	J8-5	OPTO J7-4, J6-1, J3-3, J2-6	YEL GRY
	J8-6	Playfield Lamp Board 1 pin 5	YEL ORG
	J8-7	Playfield Lamp Board 1 pin 3	YEL RED
	J8-8	Playfield Lamp Board 2 pin 4	YEL BLK
	J8-9	Playfield Lamp Board 3 pin 4	YEL TAN
	J8-10	Mars Lamp	PUR
Connector	J9-1	N/C	
	J9-2	N/C	
	J9-3	N/C	
	J9-4	N/C	
	J9-5	N/C	
	J9-6	N/C	
	J9-7	N/C	
Connector	J10-1	OPTO J3-6, Playfield Lamp Board 1 pin 7	RED GRN
	J10-2	N/C	
	J10-3	N/C	
	J10-4	Playfield Lamp Board 3 pin 1	
		Playfield Lamp Board 2 pin 1	
		Playfield Lamp Board 1 pin 1	RED BRN
	J10-5	OPTO J6-5, J2-2	RED BLU
	J10-6	Playfield Lamp Board 3 pin 2	
		Playfield Lamp Board 2 pin 2	
		Playfield Lamp Board 1 pin 2	RED BLK
	J10-7	OPTO J6-6, J2-1, Playfield Lamp Board 1 pin 9	RED PUR
	J10-8	Playfield Lamp Board 3 pin 5	
		Playfield Lamp Board 2 pin 5	
		Playfield Lamp Board 1 pin 11	RED ORG
	J10-9	OPTO J7-2, J3-5, Playfield Lamp Board 1 pin 8	RED GRY
	J10-10	Playfield Lamp Board 3 pin 6	
		Playfield Lamp Board 2 pin 6	
		Playfield Lamp Board 1 pin 12	RED YEL

Switching Power Supply

110 VAC Neutral	WHT
110 VAC Hot	BLK
F.G.	GRN
+5V of Switching Power Supply CPU J7-5	RED
Gnd of Switching Power Supply CPU J7-3	BLK
+12V of Switching Power Supply CPU J7-2	BRN
Gnd of Switching Power Supply CPU J7-1	BRN BLK

Mars Lamp

RED/PUR	I/O J8-10
BLK/GRN RED	I/O J8-1

OPTO Board 01

Connector	J1-1	I/O J5-8	BLK GRN
	J1-2	I/O J5-7	BLK WHT
	J1-3	I/O J6-2	ORG BLK
	J1-4	Gnd Switching Power Supply	BLK
	J1-5	N/C	
	J1-6	+5V Switching Power Supply	RED
	J2-1	I/O J10-7	RED PUR
	J2-2	I/O J10-5	RED BLU
	J2-3	N/C	
	J2-4	I/O J8-2	YEL GRN
	J2-5	I/O J8-4	YEL PUR
	J2-6	I/O J8-5	YEL GRY

OPTO Board 02

Connector	J3-1	I/O J8-2	YEL GRN
	J3-2	I/O J8-4	YEL PUR
	J3-3	I/O J8-5	YEL GRY
	J3-4	N/C	
	J3-5	I/O J10-9	RED GRY
	J3-6	I/O J10-1	RED GRN
	J4-1	Gnd Switching Power Supply	BLK
	J4-2	N/C	
	J4-3	+5V Switching Power Supply	RED
	J4-4	I/O J6-10	BLK TAN
	J4-5	I/O J6-8	ORG BLK
	J4-6	I/O J5-5	ORG GRN
	J4-7	I/O J5-2	ORG BLU

OPTO Board 03

Connector	J5-1	I/O J6-6	ORG PUR
	J5-2	I/O J6-5	ORG GRY
	J5-3	I/O J6-4	ORG WHT
	J5-4	Gnd Switching Power Supply	BLK
	J5-5	N/C	
	J5-6	+5V Switching Power Supply	RED
	J6-1	I/O J8-5	YEL GRY
	J6-2	I/O J8-4	YEL PUR
	J6-3	I/O J8-2	YEL GRN
	J6-4	N/C	
	J6-5	I/O J10-5	RED BLU
	J6-6	I/O J10-7	RED PUR

OPTO Board 04

Conncector	J7-1	I/O J10-1	RED GRN
	J7-2	I/O J10-9	RED GRY
	J7-3	N/C	
	J7-4	I/O J8-5	YEL GRY
	J7-5	I/O J8-4	YEL PUR
	J7-6	I/O J8-2	YEL GRN
	J8-1	Gnd Switching Power Supply	BLK
	J8-2	+5V Switching Power Supply	RED
	J8-3	I/O J6-9	ORG RED
	J8-4	I/O J6-7	ORG YEL
	J8-5	N/C	
	J8-6	I/O J5-3	BLK RED

Playfield Lamp Board 01

Connector	pin 1	I/O J10-4	RED BRN
	pin 2	I/O J10-6	RED BLK
	pin 3	I/O J8-7	YEL RED
	pin 4	N/C	
	pin 5	I/O J8-6	YEL ORG
	pin 6	N/C	
	pin 7	I/O J10-1	RED GRN
	pin 8	I/O J10-9	RED GRY
	pin 9	I/O J10-7	RED PUR
	pin 10	I/O J10-6	RED BLK
	pin 11	I/O J10-8	RED ORG
	pin 12	I/O J10-10	RED YEL

Playfield Lamp Board 02

Connector	pin 1	I/O J10-4	RED BRN
	pin 2	I/O J10-6	RED BLK
	pin 3	N/C	
	pin 4	I/O J8-8	YEL BLK
	pin 5	I/O J10-8	RED ORG
	pin 6	I/O J10-10	RED YEL

Playfield Lamp Board 03

Connector	pin 1	I/O J10-4	RED BRN
	pin 2	I/O J10-6	RED BLK
	pin 3	N/C	
	pin 4	I/O J8-9	YEL TAN
	pin 5	I/O J10-8	RED ORG
	pin 6	I/O J10-10	RED YEL

Micro Switch Coin Drop

1 -	BLK YEL - I/O J5-6	
2-	BLK	Gnd Switching Power Supply

Speed Pot

Left-	I/O J3-1	BLU RED
Center-	I/O J3-3	BLU YEL
Right-	I/O J3-4	BLU WHT

Transformer 12V/12Amp Center Tap

Connector	pin 1	110 VAC HOT	BLK
	pin 2	110 VAC Switching Power Supply	BLK WHT
	pin 3	6V/ 3 Amp Center Tap GI	BLK YEL
	pin 4	Fault Ground	GRN
	pin 5	12V/12 Amp I/O Board	RED BLK
	pin 6	12V/12 Amp I/O Board	RED BLK
	pin 7	110 VAC Neutral	WHT
	pin 8	110 VAC Switching Power Supply	WHT BLK
	pin 9	6V/3 Amp GI	YEL
	pin 10	6V/3Amp GI	YEL

Ticket Dispenser

Connector	pin 1	CPU J1-8	WHT RED
	pin 2	Gnd Switching Power Supply	BLK
	pin 3	N/C	
	pin 4	+12 V Switching Power Supply	BRN
	pin 5	N/C	
	pin 6	N/C	
	pin 7	CPU J5-7	GRY RED

Ticket/Coin Meters

Coin Meter

To CPU J5-3		GRY YEL
+12 V Switching Power Supply	BRN	

Ticket Meter

To CPU J5-5		GRY ORG
+12 V Switching Power Supply	BRN	

11 Digit Display Board

Connector	J1-1	I/O J4-1	PUR
	J1-2	I/O J4-2	GRN BLK
	J1-3	I/O J4-3	GRN BLK
	J1-4	N/C	
	J1-5	I/O J4-5	YEL BLK
	J1-6	I/O J4-6	YEL GRN
	J1-7	I/O J4-7	YEL RED

GI Strips

Connectors	pin 1	Transformer 6V/3 Amp Center Tap	YEL
	pin 2	Transformer Center Tap	YEL BLK

Flourescent Fixture

Connectors	pin 1	AC Neutral	WHT
	pin 2	AC Hot In-line Fuse	BLK

Line Filter

IN 110 VAC Neutral OUT 110 VAC Switching Power Supply	WHT
IN 110 VAC Hot OUT 110 VAC Switching Power Supply	BLK
IN Gnd OUT F.G. of Switching Power Supply	GRN

SONIC GAME REPLACEMENT PARTS LIST

PART NUMBER	DESCRIPTION
90-4-106	COIN SHOOTER HOUSING
90-4-107	COIN SHOOTER HOUSING COVER
90-4-118	CLEAR ACRYLIC MARQUEE
90-12-101	BACK DISPLAY DECAL
90-12-102	LEFT TOP SIDE DECAL
90-12-104	RIGHT TOP SIDE DECAL
90-12-103	LEFT SIDE DECAL
90-12-105	RIGHT SIDE DECAL
90-12-106	CONTROL PANEL DECAL
90-12-107	FRONT DOOR DECAL
90-13-100	PLAYFIELD PLASTIC SET
90-13-108	PLAYFIELD MYLAR OVERLAY (50 & 100)
90-22-100	PLAYFIELD GLASS
90-13-109	MARQUEE GRAPHIC INSERT PANEL
90-12-108	GAME INSTRUCTION MANUAL
90-19-100	POWER SUPPLY
90-19-101	C.P.U.
90-19-102	I.O. BOARD
90-19-110	DISPLAY BOARD
90-19-106	TOP LEFT OPTIC BOARD
90-19-107	BOTTOM LEFT OPTIC BOARD
90-19-108	TOP RIGHT OPTIC BOARD
90-19-109	BOTTOM RIGHT OPTIC BOARD
90-8-183-31	TICKET LOW SWITCH
90-8-114	MOMENTARY SWITCH
90-AP-103	MARS LIGHT (RED)
90-AP-100	TICKET DISPENSER